KS7001,2,5,8FL
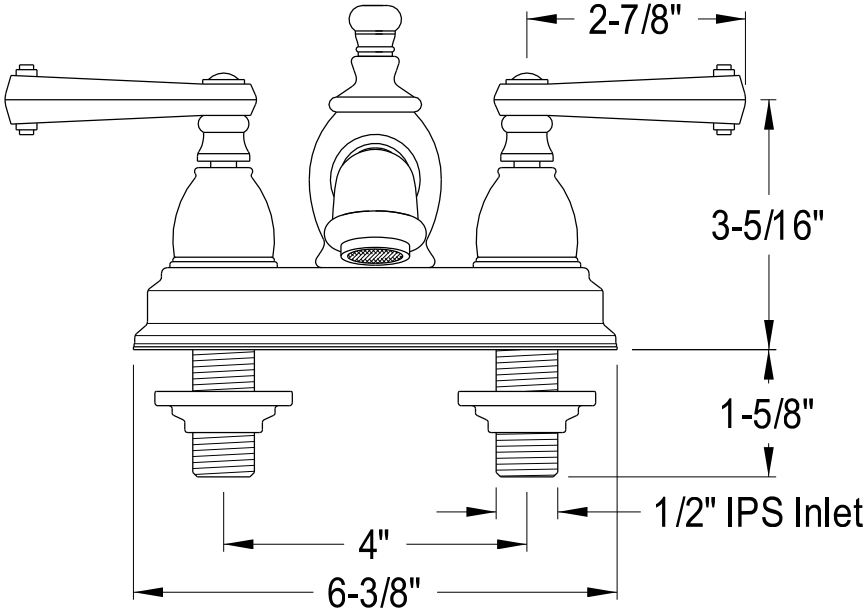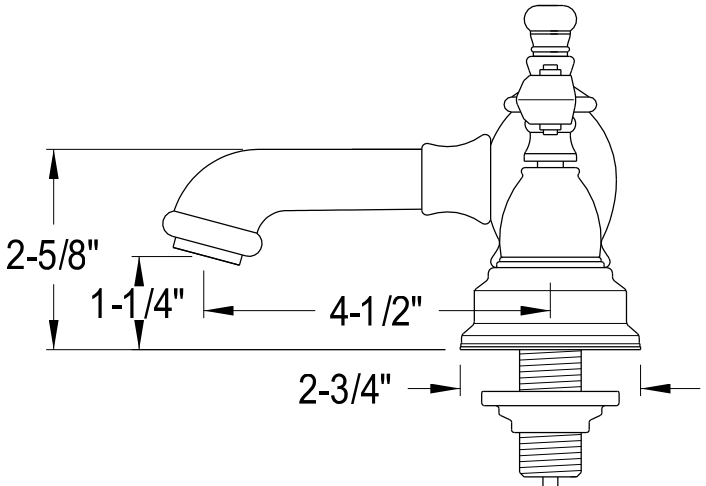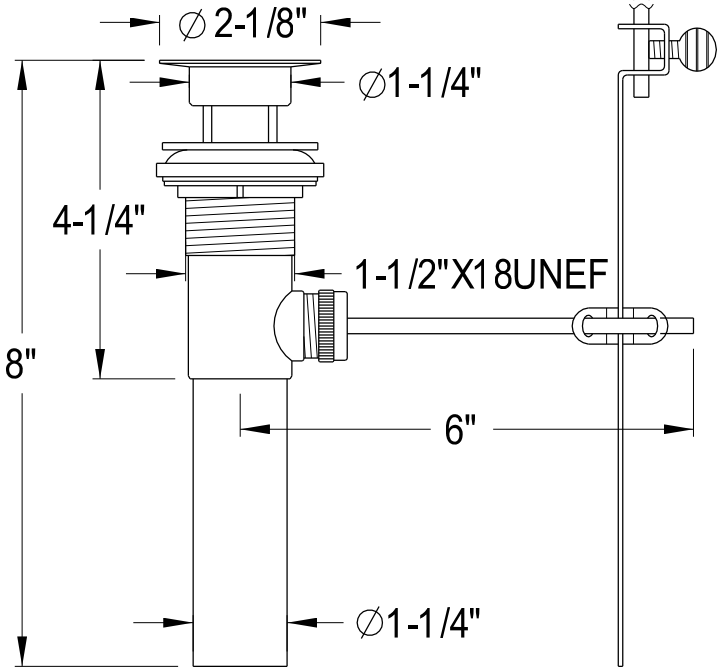
Twin Handles 4" Centerset Lavatory Faucet With Brass Pop-Up